It's Under Control®

RTI Multizone Controller

User Manual

RTI-AMP-IWC-W
In-Wall Multizone Controller – US, White

RTI-AMP-IWC-W-EU
In-Wall Multizone Controller – EU, White

RTI-AMP-IWC-B
In-Wall Multizone Controller – US, Black

RTI-AMP-IWC-B-EU
In-Wall Multizone Controller – EU, Black

Technical and Safety Notices

Before installing and using this unit, please read this guide carefully.

1. Ensure to store this document in a safe place for future reference.

2. Note this product is intended for installation by professional installers only.

3. This document is intended to provide professional installers with product installation, configuration, and safety guidelines for this product in typical fixed-installation systems.

4. Please read this document and all safety warnings before attempting installation.

5. Please note that this product does NOT include the in-wall mounting electrical box and installation screws required to install the controller.

6. Use a commercially available in-wall mounting electrical box and installation screws suitable for the specific wall material and installation situation.

7. All RTI-AMP Series Amplifiers Audio products must be installed in accordance with local, state, federal and industry regulations. It is the installer's responsibility to ensure installation is performed in accordance with all applicable codes, including local building codes and regulations. Consult the local authority having jurisdiction before installing this product.

8. Do not mount the product in locations where condensation may occur.

9. To reduce the risk of fire or electrical shock, do NOT expose this product to rain, liquids or moisture.

10. This product is not intended for installation or use in indoor water facility areas (including, without limitation, indoor pools, indoor water parks, hot tub rooms, saunas, steam rooms and indoor skating rinks).

11. Keep the product away from fire and heat sources.

12. Do NOT place naked flame sources, such as lighted candles, on or near the product.

13. Do NOT make unauthorized alterations to this product.

This manual is divided into sections covering the following topics:

- 1. Introduction
- 2. Connection
- 3. Mounting
- 4. Operation
- 5. Setup
- 6. Configuration
- 7. Reset
- 8. Specifications

Important Safety Instructions

1. Read these instructions.

2. Keep these instructions.

3. Heed all warnings.

4. Follow all instructions.

5. Do not use this apparatus near water.

6. Clean only with a soft, dry cloth.

7. Do not install near any heat sources such as radiators, heat registers, stoves, or other apparatus (including amplifiers) that produce heat.

8. Only use attachments/accessories specified by the manufacturer.

9. Refer all servicing to qualified service personnel. Servicing is required when the apparatus has been damaged in any way, such as power-supply cord or plug is damaged, liquid has been spilled or objects have fallen into the apparatus, the apparatus has been exposed to rain or moisture, does not operate normally, or has been dropped.

FOR CUSTOMERS IN EUROPE
Information to the User
This product complies with the European Directives request and the other Commission Regulations.

Environmental Statement
This product complies with international directives, including but not limited to the Restriction of Hazardous Substances (RoHS) in electrical and electronic equipment, the Registration, Evaluation, Authorization and restriction of Chemicals (REACH) and the disposal of Waste Electrical and Electronic Equipment (WEEE). Consult your local waste disposal authority for guidance on how properly to recycle or dispose of this product.

FOR CUSTOMERS IN THE USA
Information to the User
This device complies with part 15 of the FCC Rules. Operation is subject to the following two conditions:
(1) This device may not cause harmful interference, and
(2) this device must accept any interference received, including interference that may cause undesired operation.

This equipment has been tested and found to comply with the limits for a Class B digital device, pursuant to part 15 of the FCC Rules. These limits are designed to provide reasonable protection against harmful interference when the equipment is operated in a residential installation. This equipment generates, uses, and can radiate radio frequency energy and, if not installed and used in accordance with the instruction manual, may cause harmful interference to radio communications. However, there is no guarantee that interference will not occur in a particular installation.

Changes or modifications to this equipment not expressly approved by RTI-AMP Series Amplifiers for compliance could void the user's authority to operate this equipment.

Informations a l'utilisateur
CAN ICES-003 (B)/NMB-003(B)
Cet appareil est conforme à la partie 15 de la réglementation de la FCC. Son fonctionnement repose sur les deux conditions suivantes: (1) cet appareil ne doit pas provoquer d'interférences et (2) cet appareil doit tolérer les interférences externes, y compris celles qui peuvent provoquer un fonctionnement anormal.

Ce matériel a fait l'objet de tests prouvant sa conformité aux limites imposées aux appareils numériques de classe B, conformément à la partie 15 des réglementations de la FCC. Ces limites sont conçues pour fournir une protection raisonnable contre les interférences nuisibles lorsque l'équipement est utilisé dans une installation résidentielle. Cet équipement génère, utilise et peut émettre de l'énergie de radiofréquence et, s'il n'est pas installé et utilisé conformément au manuel d'instructions, peut causer des interférences nuisibles aux communications radio. Cependant, il n'y a aucune garantie que des interférences ne se produiront pas dans une installation particulière.

Toute modification non autorisée expressément par RTI-AMP Series Amplifiers Audio est susceptible d'annuler le droit de l'utilisateur à utiliser cet appareil.

Introduction

1.1 Device Description

The Multizone Controller is a wall-mounted device designed for the remote control of volume level and input source selection, of RTI-AMP Series Amplifiers.

Each Multizone Controller can control one zone only. For example, the remote control of four zones would require four devices – each assigned to one of the 4 individual zones.

Multizone Controller devices can be assigned to the same zone, although it is not recommended to connect more than eight (8) Multizone Controller devices per RTI-AMP Series Amplifier.

1.2 Device Requirements

Multizone Controller devices are only compatible with RTI-AMP Series Amplifiers running firmware version 1.6.0 or later. Ensure to update the firmware installed on the RTI-AMP Series Amplifier before attempting to install and configure Zone Controller devices. Visit RTI-AMP Series Amplifier support to check and obtain the latest firmware.

Note that the Multizone Controller is not self-powered. Power is supplied to the device with the use of a standard PoE Switch (or PoE injector) and Cat5 cable (or above).

Note that Zone Controllers are not compatible with non network connected RTI amplifiers.

Note this product is not compatible with amplifiers of third parties – i.e., those not sold under the RTI brand.

1.3 Device Specifications

Input Rating
Connector: RJ45
Cables: Category 5e (or faster STP cables)
PoE Class I device, 48V

Power Consumption
3.84Wmax

Dimensions (H x W x D)
EU: 86,79 x 86,79 x 42,8mm
US: 115,1 x 70,6 x 42,8mm (4,53 x 2,72 x 1,68in)

Weight
EU: 120g / US: 120g (4.2oz.)

Operating Temperature Range
0-40°C (32-104°F)

Connection

2.1 Device Connection

The illustration below outlines how to connect multiple Multizone Controller devices to RTI-AMP Series Amplifiers using a standard PoE network switch and Cat5 cable.

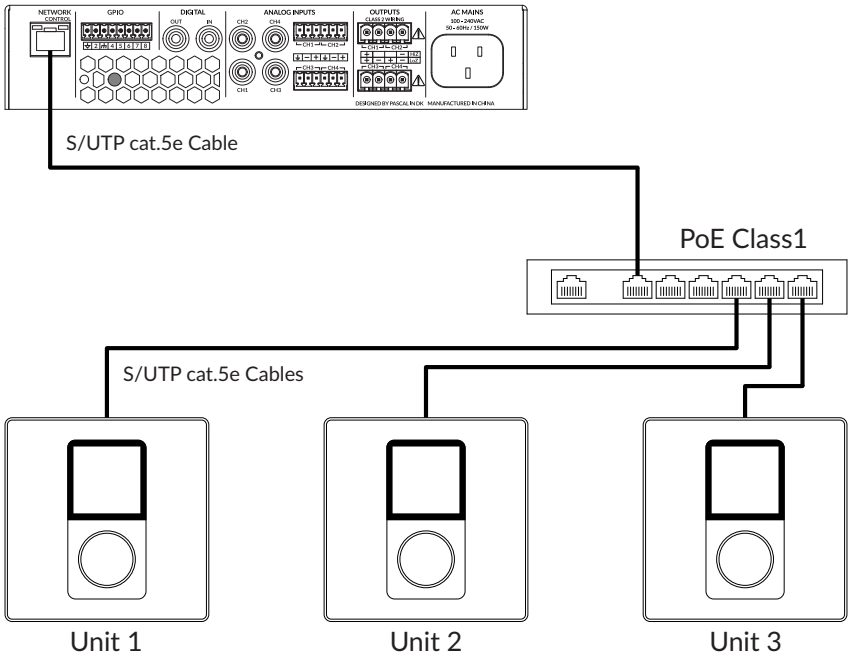

Mounting

3.1 Device Mounting

Please note that this product does NOT include the in-wall mounting electrical box and installation screws required to install the controller.

Use a commercially available in-wall mounting electrical box and installation screws suitable for the specific wall material and installation situation.

1. Feed the Ethernet cable through the electrical box.

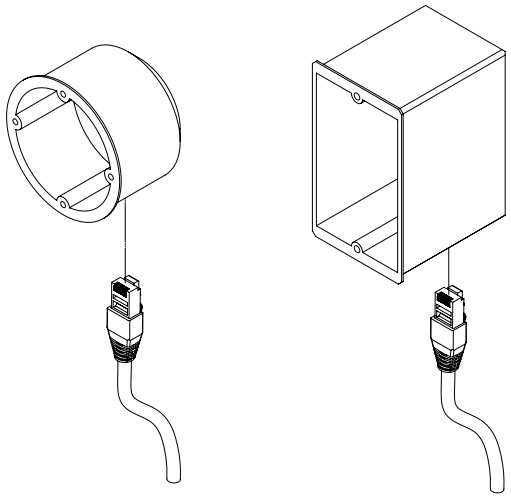

2. Mount the electrical box into the wall.

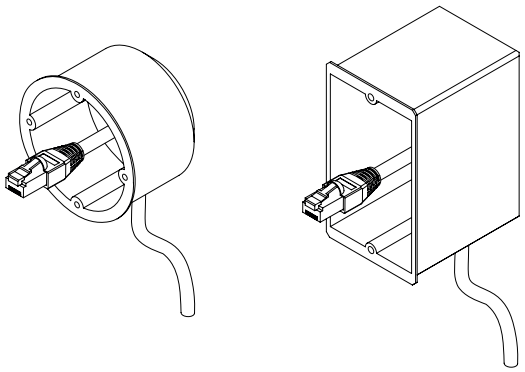

3. Connect the Ethernet cable to the Multizone Controller unit.

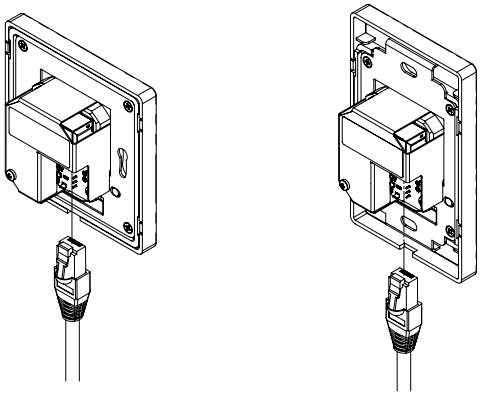

4. Click off the front panel.
   Screw the Multizone Controller unit into the electrical box.
   - Put the front panel on - and click it into place.

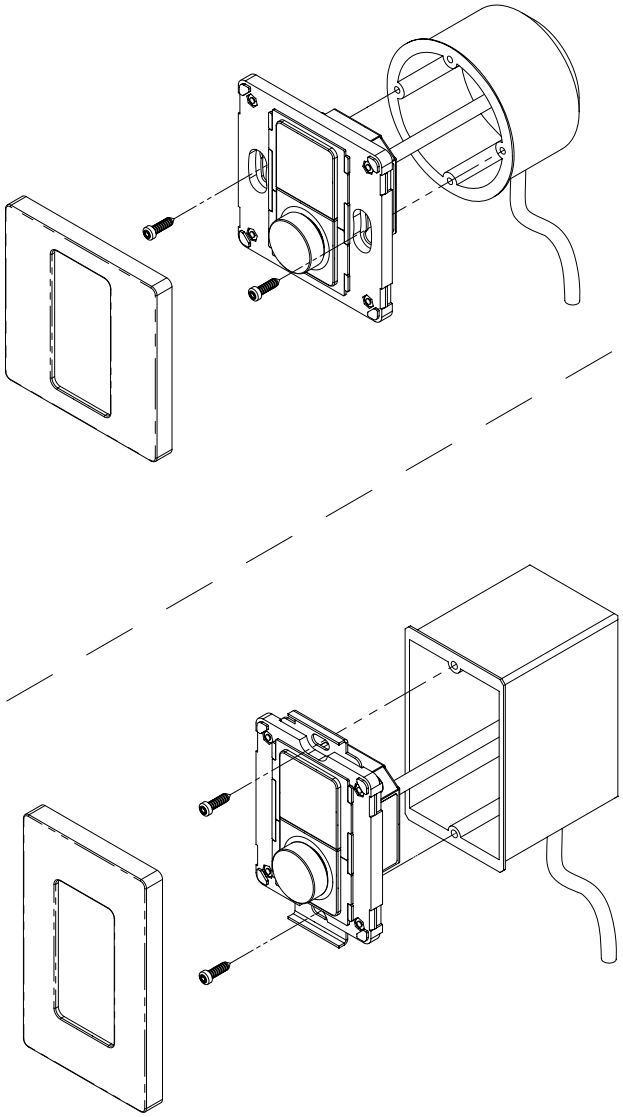

Operation

4.1 Device Operation

The Multizone Controller has been designed for easy and intuitive operation.

Once installed and configured, the user operates all the device's functions via a highly tactile rotary encoder dial, with all relevant information presented via a high-resolution color display.

- The dial is highly sensitive which makes menu navigation and unit adjustments a frustration-free experience.

- When navigating a menu or adjusting a setting by rotating the encoder dial, the user feels a tactile change in the units via a subtle 'clicking' sensation from the dial through their fingers.

- When operating the device by pressing and releasing the rotary encoder dial, the user can both feel and hear a clear click – thereby confirming the action taken.

The three primary functions of the device are operated as outlined below.

1. Twisting the rotary encoder allows the user to adjust volume and navigate menu options.

- Twisting the rotary encoder to the left (anticlockwise) turns down the volume and twisting it to the right (clockwise) turns up the volume.

2. Tapping the rotary encoder allows the user to change input source.

- Switching between input sources is performed by tapping the rotary encoder dial, twisting the rotary encoder to view the source inputs available; and confirming the desired choice by tapping the rotary encoder once more.

3. Pressing and holding the rotary encoder allows the user to access the settings menu.

- Note that access to the settings menu can also be restricted via use of optional PIN code protection – activated and configured within the settings of the amplifier Web App.

Setup

5.1 Device Setup

Note: When connecting multiple Multizone Controller devices to a single amplifier, we recommend completing all stages of the setup process, before connecting and configuring a subsequent device.

Step 1: Start Up Device

Once the Multizone Controller is receiving power via the connected Ethernet cable, the product will power up and display the welcome logo for a few seconds. The welcome logo will disappear and be replaced by the setup screen. The setup screen displays the following:

- Device pairing code
- Option to change IP address [“Edit IP Settings”]

Step 2: Edit the Device’s IP Setting (if required)

When the device is connected to a RTI-AMP Series Amplifier via a network router, the Multizone Controller will be automatically assigned an IP address (dynamic DCHP)
– this is the default setting, and in this situation, there is no need to edit the IP settings.

However, if the device is connected to a RTI-AMP Series Amplifier via a network switch, you must edit the IP settings to static IP.

On initial set-up, this can only be done via the device itself and is performed by following the steps outlined below.

1. Tap the rotary encoder to confirm the action to “Edit IP Settings”

2. On the display you will be presented with a set of options.

Twist the rotary encoder one click to the left (anticlockwise) and tap the rotary encoder to confirm the selection of the option labeled “MODE”.

3. Tap the rotary encoder to confirm the selection of the option labeled “Static”.

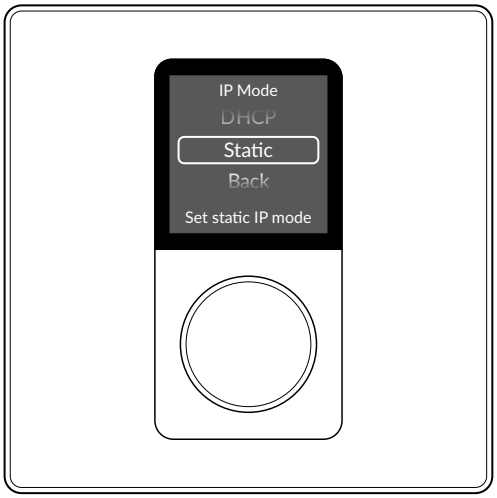

4. You will be automatically returned to the previous menu.

IMPORTANT - Jump to Step 12 if this is not the first device you are connecting to the same amplifier!

5. Twist the rotary encoder 4 clicks to the right (clockwise) to navigate to the option labeled “Back”.

6. Tap the rotary encoder to confirm the selection of the option “Back”.

Setup

7. You will be presented with the question "Apply IP Changes?"

8. Tap the rotary encoder to confirm the selection of the option labeled "Yes".

9. You will now be presented with the exact same display as at the beginning of the process, showing a pairing code – like that shown in the image below.

10. You have now completed the necessary steps for editing the IP settings required when configuring the first device to be connected to the amplifier.

IMPORTANT – When connecting >1 devices to the same amplifier, additional actions, as described below, must be taken after Step 5 to ensure each device has a unique IP address.

11. Twist the rotary encoder one click to the right (clockwise) and tap the rotary encoder to confirm the selection of the option labeled "Address".

12. Tap the rotary encoder multiple times until the last digit of the IP address is selected.

13. Twist the rotary encoder right (clockwise) to change the final digit of the IP address for this device – so it is not matching those of any other device also linked to the same amplifier. (e.g., for the second device change the final digit to #2; for the second device change the final digit to #3, and so forth).

14. Tap the rotary encoder to confirm the change and exit (as advised on the screen).

15. Twist the rotary encoder 3 clicks to the right (clockwise) to navigate to the option labeled "Back".

Setup

16. Push the rotary encoder to confirm the selection of the option “Back”.

17. You will be presented with the question “Apply IP Changes?”

18. Twist the rotary encoder one click to the left (anticlockwise) and tap the rotary encoder to confirm the selection of the option labeled “Yes”.

19. You will now be presented with the exact same display as at the beginning, showing a pairing code.

20. You have now completed the necessary steps for editing the IP settings required when configuring the second, third or further device to be connected to the amplifier.

Step 3: Connect to the amplifier using the RTI-AMP Series Amplifier Web App

If you haven’t already, connect now to the RTI-AMP Series Amplifier via your phone, tablet or computer using the RTI-AMP Series Amplifier Web App.

Refer to the quick start guide for an RTI-AMP Series Amplifier if you need a reminder on how to so this.

IMPORTANT –After connecting to the amplifier, we strongly recommend changing the Power Management setting to ”Network Only”.

There are two main reasons for this recommendation:

- The default setting labeled “Audio” can potentially block the (optional) function of being able to successfully power down the amplifier directly from the wall controller.

- Setting Power Management to one of the Eco modes [”Audio (Eco)” or ”Trigger (Eco)”] is also not recommended, as under these settings the amplifier can easily lose connection with the networked devices.

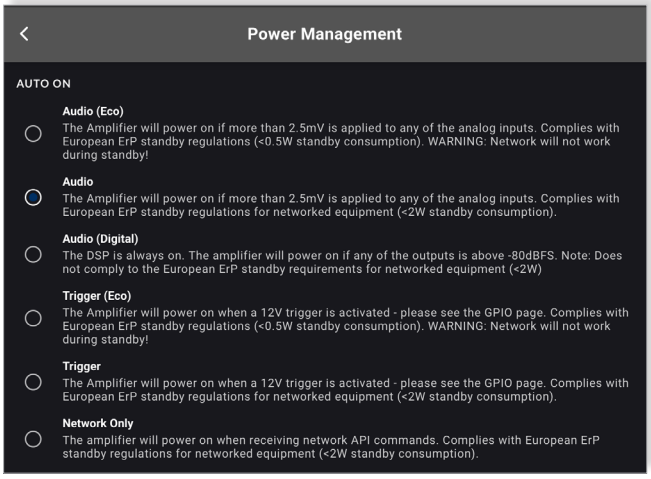

IMPORTANT - If accessing the Web App by connecting to the amplifier via a wired (Ethernet) network connection, we strongly recommend changing the WIFI settings as outlined below.

- Under the ‘Settings Menu’, go to ‘WIFI’ settings and select the option “Disable WIFI” when LAN connected. Then click “APPLY” in the upper right-hand corner.

Making this adjustment to the WIFI settings will not only avoid any potential IP address conflict, but also better secure access to the amplifier and its networked devices.

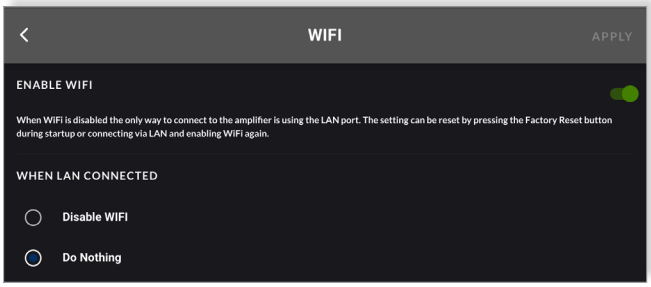

Setup

Step 4: Pair the device with the amplifier

To pair the Multizone Controller with the RTI-AMP Series Amplifier, navigate to the menu 'Settings' > 'External Devices' in the Web App.

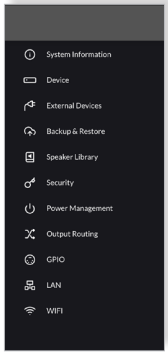

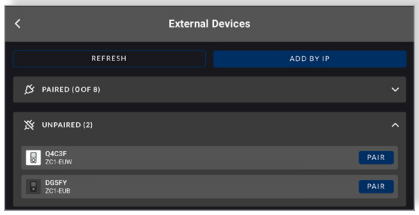

The Multizone Controller you are configuring will be displayed under 'Unpaired' devices.

Pair the device by clicking the button labeled "PAIR" next to the respective Multizone Controller.

The process of pairing the Multizone Controller with the RTI-AMP Series Amplifier takes just a few seconds. Once pairing is successful, the device will be shown under 'paired devices' in the web app, and the green "ONLINE" icon will be displayed alongside it.

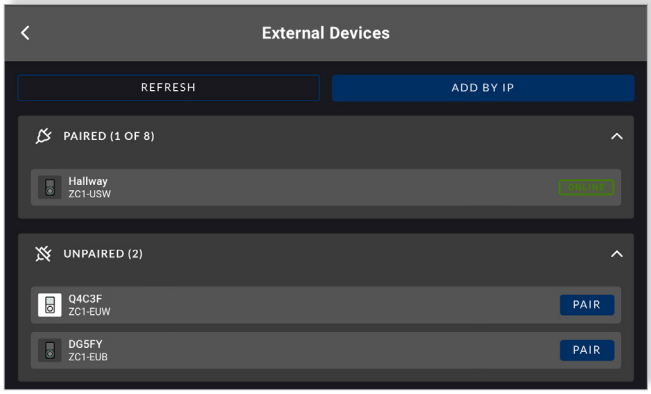

Step 5: Select the audio zone the device is intended to control

In the RTI-AMP Series Amplifier Web App, click on the device shown within the paired devices menu and navigate to the tab labeled "General".

Assign the device to a specific audio zone, selecting the desired zone from the drop-down menu (e.g., Zone A) that the device is intended to control.

Notice how the new name of the zone associated with the wall controller is instantly displayed at the top of screen of the Multizone Controller.

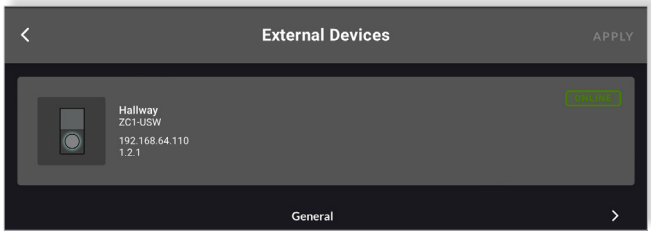

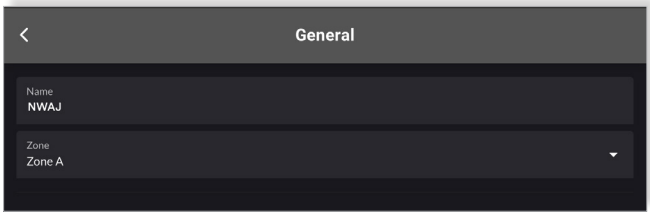

Notice how the new name of the zone associated with the wall controller is instantly displayed at the top of screen of the Multizone Controller.

Step 6: Name the device

Under the tab labeled "General" you are now recommended to type in a name for the device.
We recommend using a name that describes the device's point of installation or usage (e.g., 'Basement Bar').

Click "APPLY" to activate the name change.

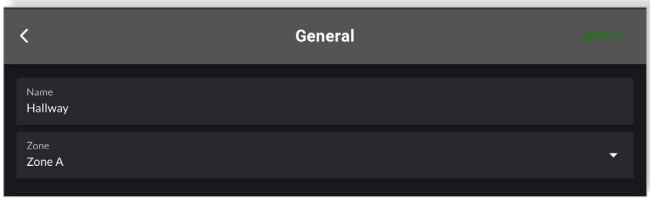

The Multizone Controller is now configured and able to remotely control the volume and source input of the zone it is associated with.

Individual Multizone Controller identification can be established by selecting the Find Me option in the 'Settings'> 'External Devices' in the Web App. The display and rotary encoder illumination of the connected device will flash.

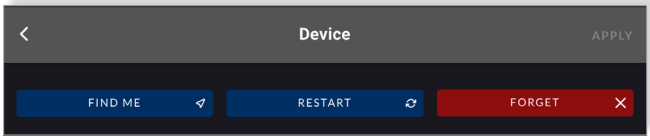

Configuration

6.1 Amplifier Power On/Off Feature

The amplifier can be both powered on and off, directly from the Multizone Controller.

By default, this function is not active and so needs to be first activated within the settings of the device via the RTI-AMP Series Amplifier Web App.

Under the tab labeled “General” there is an option at the bottom labeled “AMPLIFIER SHUT DOWN”, and a toggle switch to the right.

Firstly, toggle the switch so it displays as active (green).

Secondly, click “APPLY” in the top right-hand corner to activate the feature.

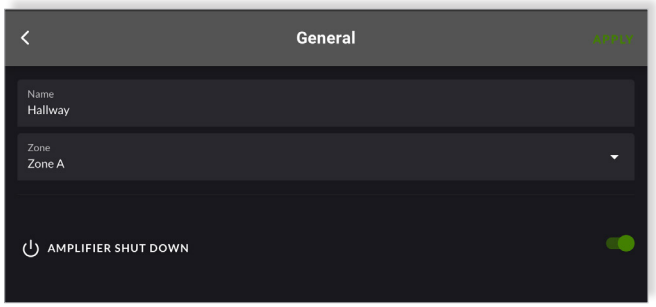

Once the feature has been activated, it is possible for the amplifier to be both powered on and off, directly from the Multizone Controller.

To turn the amplifier off (into standby mode), follow the steps outlined below.

1. Press and hold the rotary encoder until the option “Power Off Amp” appears (shows below the setting menu when the feature is activated).

2. Tap the rotary encoder to confirm the selection of the option action “Power Off Amp”.

3. You will be presented with the question “Power Down Amplifier?”

4. Twist the rotary encoder to highlight the option “Yes” and tap the rotary encoder to confirm the selection.

When the amplifier is in standby power mode, it will be communicated via both the dashboard section of the Web App, and on the display screen of the Multizone Controller itself. (See next column top right)

To turn the amplifier on (back from standby mode), follow the steps outlined below.

1. Tap the rotary encoder.

2. You will be presented with the question “Power Up Amplifier?”

3. Twist the rotary encoder to highlight the option “Yes” and tap the rotary encoder to confirm the selection.

6.2 Display Screen Back-light Settings: Brightness - Customization

Thanks to the color LCD display the user can clearly see the zone the controller is associated with, the audio source input that is selected and the current volume level. The high-resolution screen provides enough space for a font size adequate for the user to read and navigate text and menu settings.

The intensity of the display screen’s back-light can be adjusted to suit the use environment and user preference. The adjustment can be made directly on the wall controller itself or changed within the RTI-AMP Series Amplifier Web App.
Three setting levels are possible:

- Low (least bright)
- Medium
- High (most bright)

In the RTI-AMP Series Amplifier Web App, click on the device shown within the paired devices menu and navigate to the tab labeled “Visuals”. Select the preferred brightness level and, then click the button labeled “APPLY” in the top right-hand corner to activate the change.

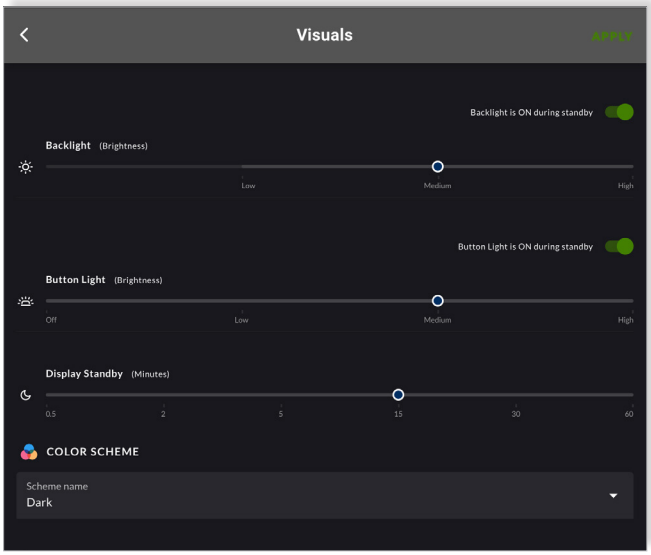

Configuration

The intensity of the display screen's back-light can also be customized within the settings menu of the Multizone Controller itself. To change the intensity of the display screen's back-light via the Multizone Controller, follow the steps outlined below.

1. Press and hold the rotary encoder until the settings menu appears.

2. Tap the rotary encoder to confirm the selection of the "Settings" menu.

3. Tap the rotary encoder to confirm the selection of the "Visuals" menu.

4. Tap the rotary encoder to confirm the selection of the "Back-light" menu.

5. Twist the rotary encoder left and right to explore the options available, as shown on the screen.

6. Tap the rotary encoder to confirm the desired intensity of the display screen's backlight.

7. Twist the rotary encoder one click to the right (clockwise) to navigate to the option labeled "Back".

8. Tap the rotary encoder to confirm the selection of the option action "Back".

9. Twist the rotary encoder 2 clicks to the right (clockwise) to navigate to the option labeled "Back".

10. Tap the rotary encoder to confirm the selection of the option action "Back".

11. You will be presented with the question "Apply Visual Changes?"

12. Twist the rotary encoder to highlight the option "Yes" and tap the rotary encoder to confirm the selection .

13. Twist the rotary encoder 2 clicks to the right (clockwise) to navigate to the option labeled "Back".

14. Tap the rotary encoder to confirm the selection of the option action "Back".

15. You are now returned to the primary screen view displaying the zone, source input and volume level of the associated zone.

6.3 Display Screen Back-light Settings: Standby - Customization

To enhance the user experience, the back-light of the display can also be deactivated, when the is in standby mode.

This feature is especially valuable when lighting conditions of the room change – e.g., from bright sunlight during the day to darker conditions in the evening. Please note that when the back-light is deactivated, the screen appears completely blank to the user, and no longer communicates the zone, source input or volume level of the associated zone.

The adjustment can be made directly on the wall controller itself or changed within the RTI-AMP Series Amplifier Web App.
Using the Web App "Visuals" tab, firstly move the toggle switch to the left – so the text "Back-light is OFF during standby" is displayed.

Afterwards, click the button labeled "APPLY" in the top right-hand corner to activate the feature.

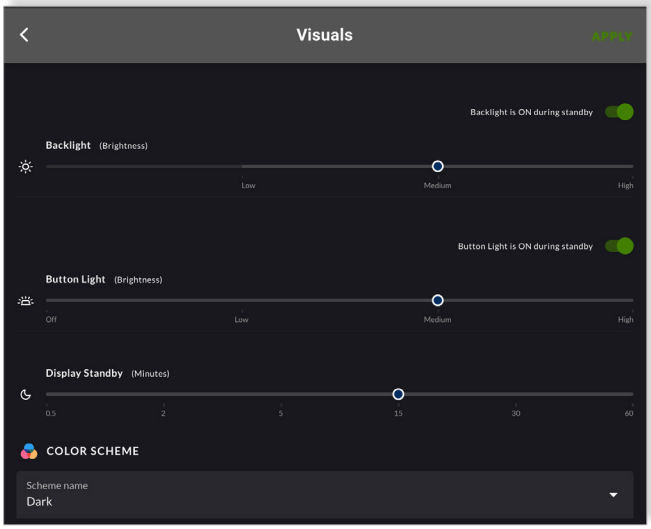

The display screen can also be deactivated when the display is in standby mode within the settings menu of the Multizone Controller itself.

To deactivate the screen display when the display is in standby mode via the Multizone Controller, simply follow the steps outlined below.

1. Press and hold the rotary encoder until the settings menu appears.

2. Tap the rotary encoder to confirm the selection of the "Settings" menu.

3. Tap the rotary encoder to confirm the selection of the "Visuals" menu.

4. Tap the rotary encoder to confirm the selection of the "Back-light" menu.

5. Twist the rotary encoder one click to the left (anti-clockwise) to navigate to the option labeled "Standby".

6. Tap the rotary encoder to confirm the selection of the "Standby" menu.

7. Twist the rotary encoder left and right to toggle between the display standby options "ON" and "OFF".

8. Tap the rotary encoder to confirm your preferred display standby setting (ON means display screen back-light remains on even when Multizone Controller is in standby mode).

9. Twist the rotary encoder 2 clicks to the right (clockwise) to navigate to the option labeled "Back".

10. Tap the rotary encoder to confirm the selection of the option action "Back".

11. Twist the rotary encoder 2 clicks to the right (clockwise) to navigate to the option labeled “Back”.

12. Tap the rotary encoder to confirm the selection of the option action “Back”.

13. You will be presented with the question “Apply Visual Changes?”

14. Twist the rotary encoder to highlight the option “Yes” and tap the rotary encoder to confirm the selection.

15. Twist the rotary encoder 2 clicks to the right (clockwise) to navigate to the option labeled “Back”.

16. Tap the rotary encoder to confirm the selection of the option action “Back”.

17. You are now returned to the primary screen view displaying the zone, source input and volume level of the associated zone.

6.4 Rotary Encoder Dial Back-light Settings: Brightness - Customization

The intensity of the back-light behind the rotary encoder dial can be adjusted to suit the use environment and user preference. Four setting levels are possible:

- Off (no light)
- Low (least bright)
- Medium
- High (most bright)

The adjustment can be made directly on the wall controller itself or changed within the RTI-AMP Series Amplifier Web App.

Using the Web App, the intensity of rotary encoder dial back-light can be quickly changed via the slider located at in the center of the “Visuals” tab.

Simply choose the preferred brightness level and, then click the button labeled “APPLY” in the top right-hand corner to activate the change.

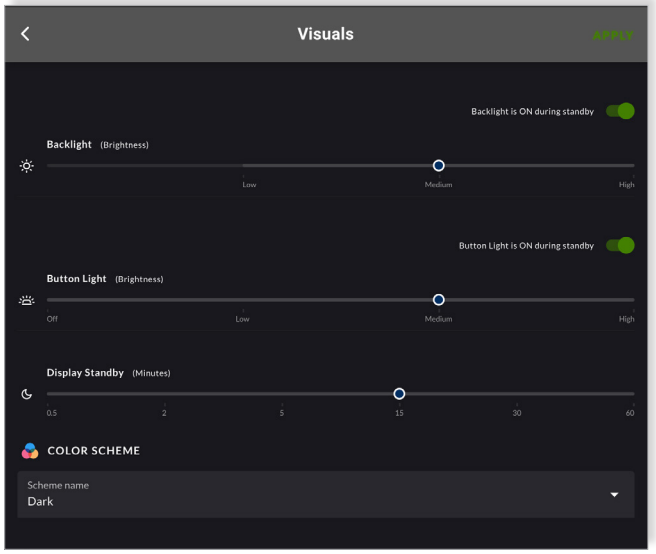

The intensity of the back-light behind the rotary encoder dial can also be customized within the settings menu of the Multizone Controller itself. To change the intensity of the back-light behind the rotary encoder dial via the Multizone Controller, simply follow the steps outlined below.

1. Press and hold the rotary encoder until the settings menu appears.

2. Tap the rotary encoder to confirm the selection of the “Settings” menu.

3. Tap the rotary encoder to confirm the selection of the “Visuals” menu.

4. Twist the rotary encoder one click to the right (clockwise) and tap the rotary encoder to confirm the selection of the option labeled “Button Light”.

5. Tap the rotary encoder to confirm the selection of the option labeled “Brightness”.

6. Tap the rotary encoder to confirm the selection of the “Brightness” menu.

7. Twist the rotary encoder left and right to toggle between the four options “OFF”; “LOW”; “MID”; “HIGH”.

8. Tap the rotary encoder to confirm your preferred setting.

9. Twist the rotary encoder 1 click to the right (clockwise) to navigate to the option labeled “Back”.

10. Tap the rotary encoder to confirm the selection of the option action “Back” .
11. Twist the rotary encoder 1 click to the right (clockwise) to navigate to the option labeled “Back”.

12. Tap the rotary encoder to confirm the selection of the option action “Back”.

13. You will be presented with the question “Apply Visual Changes?”

14. Twist the rotary encoder to highlight the option “Yes” and tap the rotary encoder to confirm the selection.

15. Twist the rotary encoder 2 clicks to the right (clockwise) to navigate to the option labeled “Back”.

16. Tap the rotary encoder to confirm the selection of the option action “Back”.

17. You are now returned to the primary screen view displaying the zone, source input and volume level of the associated zone.

6.5 Rotary Encoder Dial Back-light Settings: Standby - Customization

To facilitate the ideal user experience, the back-light of the rotary encoder dial can also be deactivated, when the display is in standby mode.

This feature is especially valuable when lighting conditions of the room change – e.g., from bright sunlight during the day to darker conditions in the evening.

The adjustment can be made directly on the wall controller itself or changed within the RTI-AMP Series Amplifier Web App.
Using the Web App, firstly move the toggle switch to the left – so the text “Button Light is OFF during standby” is displayed.

Afterwards, click the button labeled “APPLY” in the top right-hand corner to activate the feature.

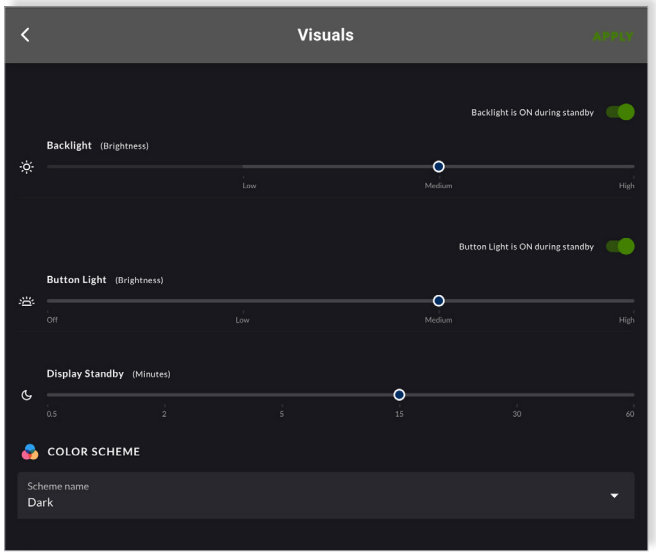

The back-light of the rotary encoder dial can also be deactivated when the display is in standby mode, within the settings menu of the Multizone Controller itself.

To deactivate the back-light of the rotary encoder dial when the display is in standby mode via the Multizone Controller,
simply follow the steps outlined below.

1. Press and hold the rotary encoder until the settings menu appears.

2. Tap the rotary encoder to confirm the selection of the “Settings” menu.

3. Tap the rotary encoder to confirm the selection of the “Visuals” menu.

4. Twist the rotary encoder one click to the right (clockwise) and tap the rotary encoder to confirm the selection of the option labeled “Button Light”.

5. Twist the rotary encoder one click to the left (anticlockwise) and tap the rotary encoder to confirm the selection of the option labeled “Standby”.

6. Twist the rotary encoder left and right to toggle between the display standby options “ON” and “OFF”.

7. Tap the rotary encoder to confirm your preferred display standby setting (ON means the rotary encoder dial backlight remains on even when Zone Controller is in standby mode).

8. Twist the rotary encoder 2 clicks to the right (clockwise) to navigate to the option labeled “Back”.

9. Tap the rotary encoder to confirm the selection of the option action “Back”.

10. Twist the rotary encoder 1 click to the right (clockwise) to navigate to the option labeled “Back”.

11. Tap the rotary encoder to confirm the selection of the option action “Back”.

12. You will be presented with the question “Apply Visual Changes?”

13. Twist the rotary encoder to highlight the option “Yes” and tap the rotary encoder to confirm the selection.

14. Twist the rotary encoder 2 clicks to the right (clockwise) to navigate to the option labeled “Back”.

15. Tap the rotary encoder to confirm the selection of the option action “Back”.

16. You are now returned to the primary screen view displaying the zone, source input and volume level of the associated zone.

Configuration

6.6 Display Screen Colour Scheme - Customization

Thanks to the color LCD display the user can clearly see the zone the controller is associated with, the audio source input that is selected and the current volume level.

The high-resolution screen provides enough space for a font size adequate for the user to read and navigate text and menu settings.

A choice of four different color schemes also provides the possibility to customize the display to best match the use environment and/or personal preference.

- BLUE = White Text on Blue Background.
- DARK = White Text on Dark Grey Background.
- LIGHT = Black Text on Light Grey Background.
- ORANGE= Orange Text on Dark Grey Background.

Note, that by default the color scheme is set to “DARK”.

Customization can be made within the RTI-AMP Series Amplifier Web App, or directly via the Multizone Controller itself.

Using the Web App, the color scheme can be quickly changed via the drop-down menu located at the bottom of the “Visuals” tab. Simply choose the preferred color scheme, and then click the button labeled “APPLY” in the top right-hand corner to activate the change.

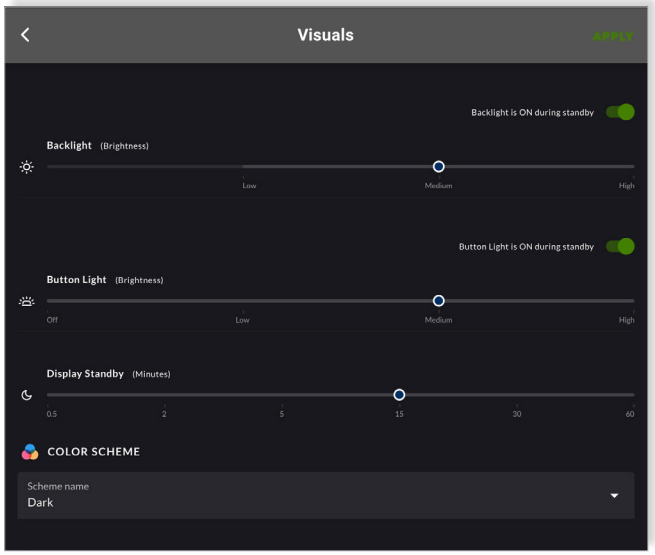

The color scheme can also be customized within the settings menu of the Multizone Controller itself. To change the screen color scheme via the Multizone Controller, simply follow the steps outlined below.

1. Press and hold the rotary encoder until the settings menu appears.

2. Tap the rotary encoder to confirm the selection of the “Settings” menu.

3. Tap the rotary encoder to confirm the selection of the “Visuals” menu.

4. Twist the rotary encoder one click to the left (anticlockwise) and tap the rotary encoder to confirm the selection of the option labeled “Color Scheme”.

5. Twist the rotary encoder left and right to explore the options available, as shown on the screen.

6. Tap the rotary encoder to confirm the desired color scheme.

7. Twist the rotary encoder to the right (clockwise) until you have navigated to the option labeled “Back”.

8. Tap the rotary encoder to confirm the selection of the option action “Back”.

9. Twist the rotary encoder 3 clicks to the right (clockwise) to navigate to the option labeled “Back”.

10. Tap the rotary encoder to confirm the selection of the option action “Back”.

11. You will be presented with the question “Apply Visual Changes?”

12. Twist the rotary encoder to highlight the option “Yes” and tap the rotary encoder to confirm the selection.

13. Twist the rotary encoder 2 clicks to the right (clockwise) to navigate to the option labeled “Back”.

14. Tap the rotary encoder to confirm the selection of the option action “Back”.

15. You are now returned to the primary screen view displaying the zone, source input and volume level of the associated zone.

Configuration

6.7 Local User Lock and Unlock (PIN Code Protection)

A 4-digit numerical pin code can be set, reset, and enabled within the RTI-AMP Series Amplifier Web App to restrict usage of the device.

When enabled, no one can operate the device and/or adjust the settings - unless they are able to enter the correct PIN code. This makes it possible to place devices in areas where unauthorized room users have easy access to the device.

Note that the PIN code can always be reset via the Web App. This solves the problem of potentially forgotten PIN codes, whilst also providing the opportunity to change the PIN code if circumstances change.

The PIN code protection can either be kept deactivated ("OFF") or applied at three distinct levels: (A) "Settings Only"; (B) "All Access", and (C) All Access (Dual PIN).

6.8.1 Level A: "Settings Only" - Applied to Protect Access to The Settings Menu Only

Typical Use Case Scenario: Example – Multizone Controller devices are placed within easy reach of authorized users (e.g., workers) of a café. Enabling the local user lock function and setting it to "Settings Only" allows the users to adjust volume and switch audio source, but prevents the users being able to customize the device, change critical settings or reset the device.

- All functions of the wall controller are available, and the device remains completely unlocked for use by any user with physical access to the device.

- Only when the user attempts to access the "Settings" menu are they prompted to enter the correct PIN code on the device – turning the rotary encode dial to select each digit on the screen; and pushing the dial to confirm each digit.

- If successfully unlocked, all functions under the settings menu become accessible.

- Until the correct PIN code is entered, the functions inaccessible to the user include:

  - Visuals (settings relating to customization of standby, back-lights and color scheme).

  - Reset Device (ability to completely reset the device).

  - IP Settings (ability to adjust the IP settings of the device).

Steps To Setup:

1. Using the RTI-AMP Series Amplifier Web App, navigate to the "Lock" tab and select the option "Settings Only" shown under the headline "CONTROLLER LOCK ENABLE".

2. Type into the box labeled "PIN Code" a 4-digit PIN code of your choice (we recommend changing the PIN code, otherwise it will remain '0000').

3. Click the button labeled "APPLY" in the top right-hand corner to activate the feature as configured.

Note that the "Auto Lock" function is NOT an available option under this second level. The locking of the settings menu applies all the time, from the instant the option is applied in the Web App.

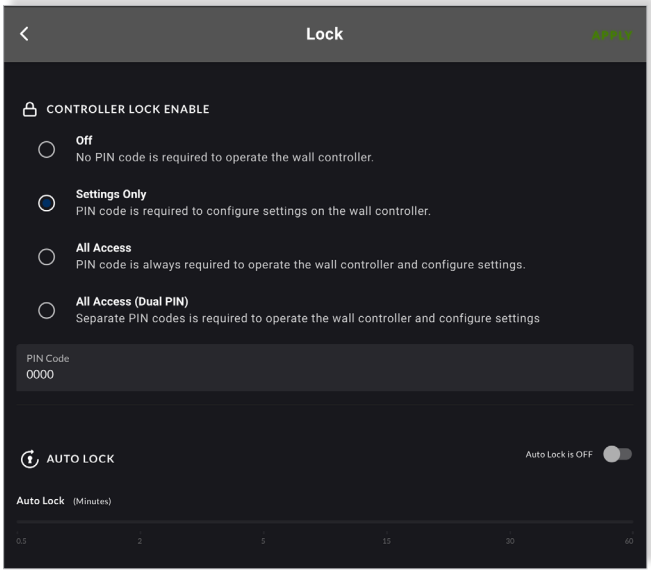

6.8.2 Level B: "All Access" - Applied to Protect Access To All Functions

Typical Use Case Scenario: Example - Multizone Controller devices are placed within easy reach of customers of a café. Enabling the local user lock function and setting it to "All Access" prevents the possibility of customers adjusting the volume, switching the audio source, or making any other adjustment to the installed system.

- Until unlocked, none of the functions of the Multizone Controller can be accessed.

- If a user attempts to use the device, they are prompted to enter the correct PIN code on the device – turning the rotary encode dial to select each digit on the screen; and pushing the dial to confirm each digit.

- Once successfully unlocked, functions become accessible.

- Note: To enter the "Settings" menu you will be prompted to enter the PIN code again – this helps ensure the security of the device whilst the Auto Lock function is off.

Configuration

Steps to Setup:

1. Using the Web App, navigate to the “Lock” tab and select the option “All Access” shown under the headline “CONTROLLER LOCK ENABLE”.

2. Type into the box labeled “PIN Code” a 4-digit PIN code of your choice (we recommend changing the PIN code, otherwise it will remain ‘0000’).

3. Toggle to the right the switch labeled “Auto Lock” - it will turn green (active) and display the label “Auto Lock is ON”.

4. Using the slider, select the desired period of time to elapse before the controller is locked, and thus requiring the entering of the correct PIN code to unlock. (We suggest that under many circumstances the shortest period of 30 seconds would be suitable).

5. Finally, click the button labeled “APPLY” in the top right-hand corner to activate the feature as configured.

6. Once activated, you can choose to manually lock the device immediately, or let the device automatically lock itself after the period of period of time selected on the Auto Lock slider.

7. To manually lock the device immediately, do as described.

- Press and hold the rotary encoder of the device until the option “Lock Controller” appears on the display screen.

- Tap the rotary encoder to confirm the action to “Lock Controller” - you will be immediately presented with the message “Controller Locked”, and thereafter a padlock icon will appear on the display screen of the device; indicating the device is now locked – thus requiring the entering of a PIN code to unlock.

8. To let the device automatically lock itself, do as described.

- Wait until the period of time selected on the Auto Lock slider has elapsed. You will subsequently notice a padlock icon appear on the display screen of the device, indicating the device requires the entering of a PIN code to unlock.

9. To unlock the device, the user must enter the correct PIN code on the device. This is performed by turning the rotary encode dial to select each digit on the screen; and pushing the dial to confirm each digit.

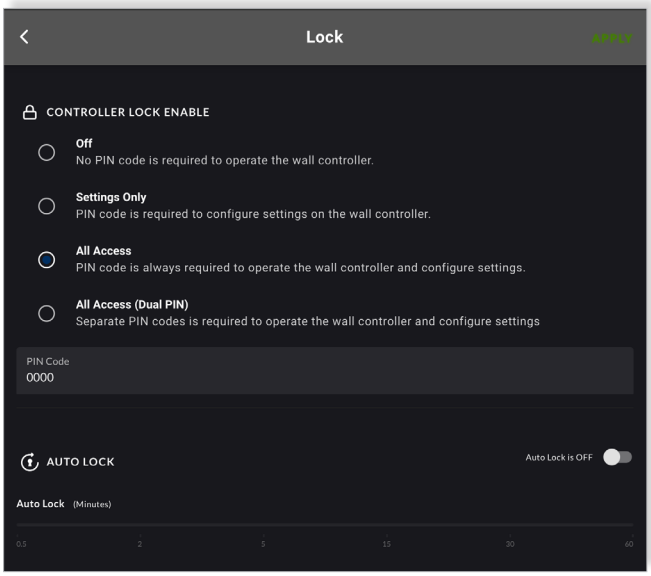

6.8.3 Level C: “All Access (Dual PIN)” - Applied to Protect Access To All Functions with Dual PIN

A further level of security is available with Option C enabling different PIN controlled access to Multizone Controller operation and settings.

This option enables, for example, operators with different responsibilities to have access only to the functions appropriate to their roles.

Option C setup is carried out in a similar manner to Option B described in Section 6.8.2. the only difference is that two four digit PINs are required.

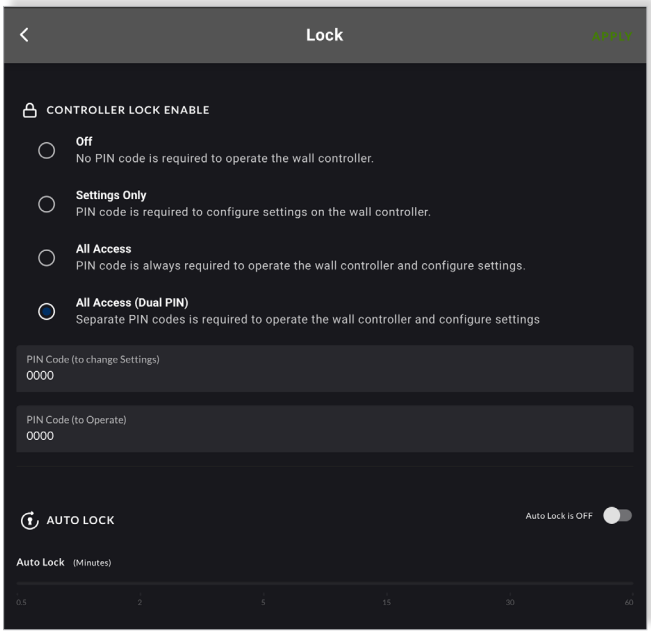

6.9 Volume Control (Range) Limitation

A lower (minimum) and upper (maximum) volume limitation can be applied to the zone the device is configured to control.

This feature is especially valuable in scenarios where the total power of the channel output greatly exceeds the volume suitable for the installation environment.

The feature is also very useful to apply in scenarios where it is preferred the volume does not fall below a certain level - with the exception of complete muting.

Within the RTI-AMP Series Amplifier Web App, this feature can be found by navigating to the volume menu of the Zone

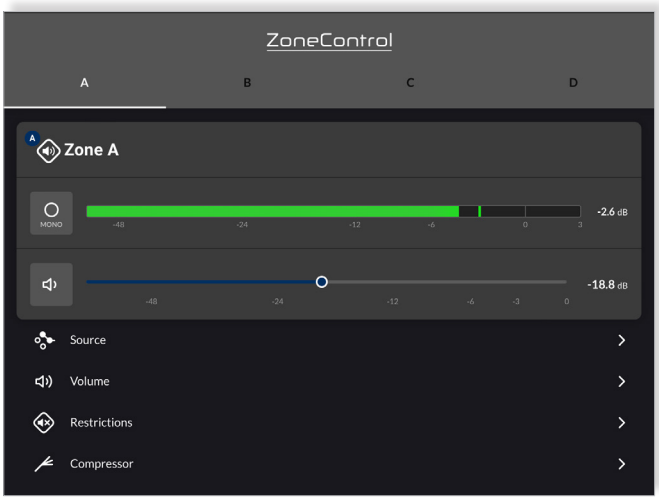

Tab, within the Web App (see below).

The minimum and maximum volume limits are set using a slider found within the section labeled “RANGE”. For accuracy, volume settings are displayed in decibels (dB) (see below).

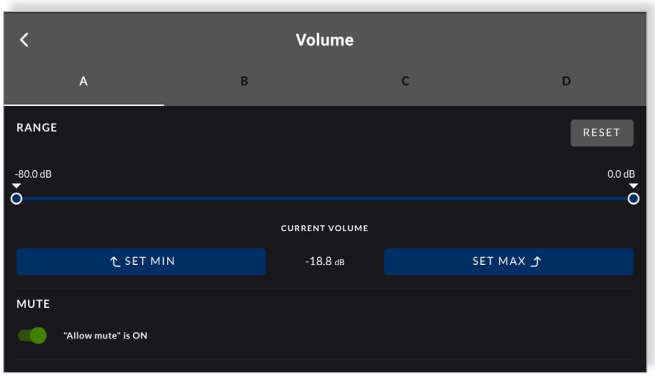

On the device, the end user is made visually aware of the volume range limitation when adjusting the volume level (see below).

Note that as a convenience to the user, the volume settings on the device are always displayed as a relative level on a scale of 0 – 100, rather than in decibels.

Note that if the volume is turned below the minimum level, the output is completely muted, and the mute icon is shown on the display screen.

It is also possible to disable the amplifier zone mute function. This can be particularly significant in situations where important information potentially needs to be heard in a specific zone. To disable or enable the mute function, toggle the ”Allow mute” switch in Volume menu of the Zone Tab.

Reset

7.1 Device Reset

It is possible to reset a Multizone Controller back to its factory-default state. When resetting the device, any previous settings including IP address information is cleared.

The use of this function is only required in exceptional circumstances whereby a complete device reset is necessary.

To perform a complete device reset, follow the steps outlined below.

1. Press and hold the rotary encoder until the “Settings” menu appears.

2. Tap the rotary encoder to confirm the selection of the “Settings” menu.

3. Twist the rotary encoder one click to the left (anticlockwise) and tap the rotary encoder to confirm the selection of the option labeled “Reset Device”

4. Tap the rotary encoder to confirm the selection of the option action “Reset Device”.

5. You will be presented with the question “Reset to Factory Defaults?”

6. Twist the rotary encoder to highlight the option “Yes” and tap the rotary encoder to confirm the selection.

7. After a few seconds the device will turn off, then restart and show a new paring code on the display screen.

8. In the Web App, you will notice the device you just reset shows up with a red box stating the device is “Offline” (as shown below).

9. In the Web App, click on the device and navigate to the “Device” tab.

10. In the bottom right-hand corner of the device tab there is a red button labeled “Forget Device” – click this to completely remove the device from the system.

11. You will be returned to the “External Devices” page and a green pop-up will state “DEVICE WAS UNPAIRED” – confirming the completion of the process.

12. The device is now ready to be re-paired and configured.

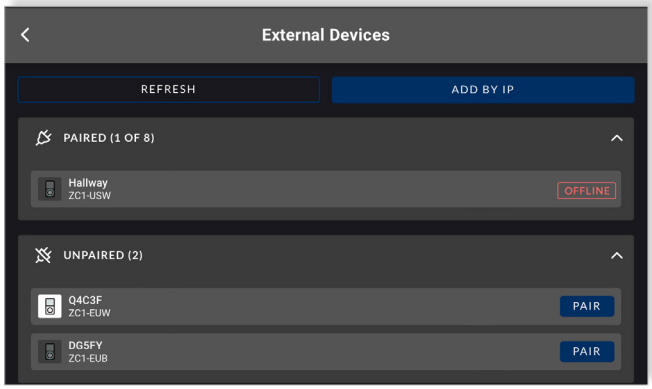

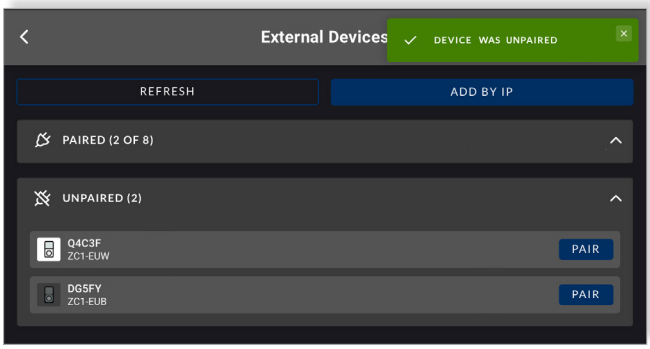

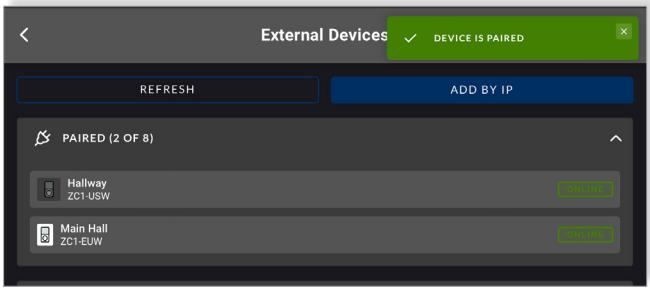

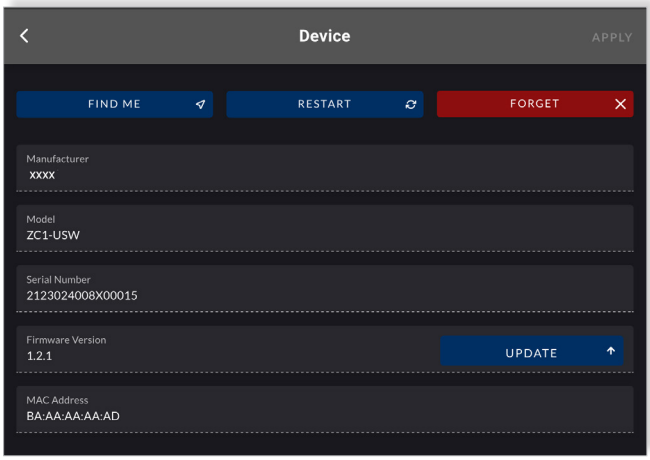

Specifications

Model	**RTI-AMP-IWC-W-EU**	**RTI-AMP-IWC-B-EU**	**RTI-AMP-IWC-W**	**RTI-AMP-IWC-B**
Amplifier Compatibility	RTI-AMP Series			
Colour	White (RAL9003)	Black (RAL9005)	White (RAL9003)	Black (RAL9005)
External Dimensions (H x W)	86.79 x 86.79mm (3.42 x 3.42in)		115.1 x 70.6mm (4.53 x 2.78in)	
External Dimensions, Depth [From rear side of mounting plate to outer side of shield box]	23.7mm (0.93in)		23.1mm (0.91in)	
External Dimensions, Depth [From tip of rotary encoder dial to outer side of shield box]	42.8mm (1.68in)		42.8mm (1.68in)	
Mounting Holes, Distance (Center to Center)	60 mm (2.36in)		83.5mm (3.29in)	
Weight	120g (4.2oz.)		120g (4.2oz.)	
Operating Temperature Range	0-40°C (32-104°F)			
Display Screen Dimension (excluding black border)	27.72mm x 27.72mm			
Display Screen Area (excluding black border)	768.4sqmm			
Display Screen Resolution	240 x 240 pixels			
Display Screen Type	RGB, Transmissive / Normally Black			
Display Screen Material	High gloss polished transparent acrylic			
Exterior & Mechanical Parts Material	Plastic (ABS-PC)			
Base Construction & Shield Material	Pre-galvanized steel			
Power Consumption	PoE Class 1 / 3.84 Wmax			
Power Supply	Power to the RJ45 Ethernet port on the rear of device using a category 5e cable (or faster STP) with the use of a standard PoE switch, or PoE injector			
Standby Modes	6 settings available: 30 secs, 2 mins, 5 mins, 15 mins, 30 mins, 60 mins			
Connection & Data Protocol	RJ45, RTI-AMP proprietary over CAT 5e (or faster STP)			
Maximum Cable Length (CAT 5e)	100m (328ft)			
IP Rating	IP 30			
Warranty Period	2 Years			

Rev B 10/01/2024

AVPro Global Holdings, LLC
2222 E 52nd Street N
Sioux Falls, SD 57104
www.avproglobal.com

© 2026 AVPro Global Holdings, LLC. All rights reserved.