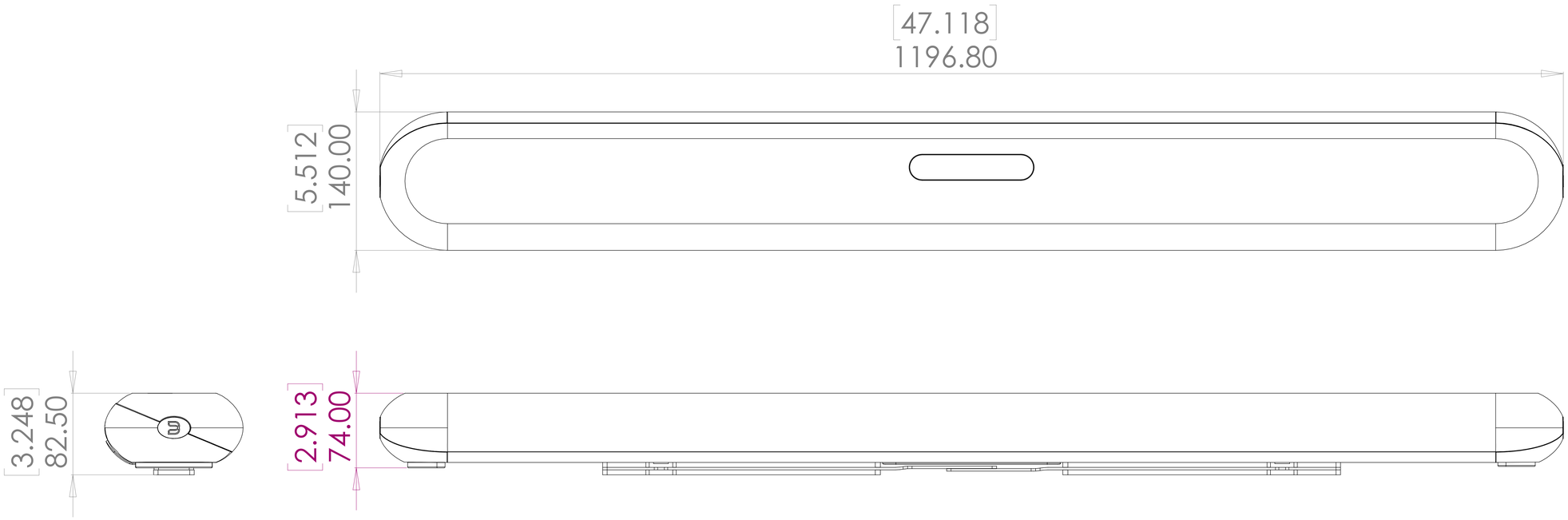

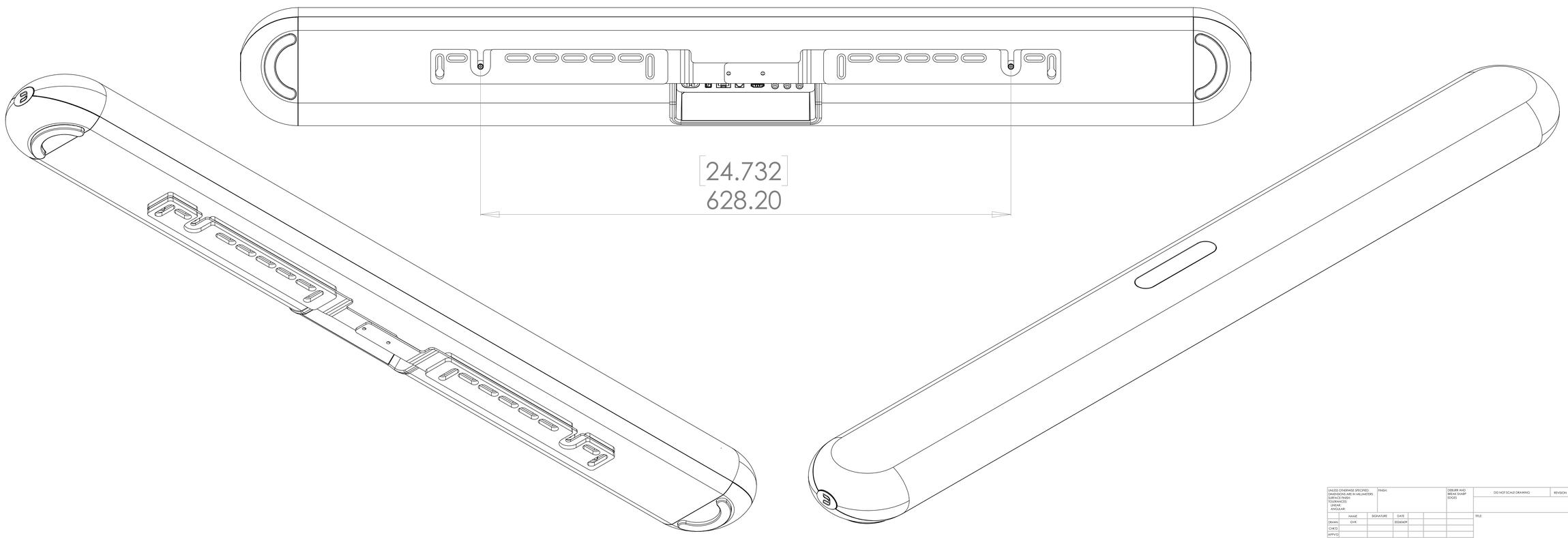

UNLESS OTHERWISE SPECIFIED: DIMENSIONS ARE IN MILLIMETERS TOLERANCES: LINEAR: ANGULAR:	FINISH:		DEBURR AND BREAK SHARP EDGES	DO NOT SCALE DRAWING	REVISION
	NAME	SIGNATURE	DATE	TITLE:	
DRAWN	GVA		2024/04/29		
CHK'D					
APPV'D					
MFG					
Q.A				MATERIAL:	DWG NO. P530 A0
				WEIGHT:	SCALE:1:1.73 SHEET 1 OF 1